REV.	ECN NO.	DESCRIPTION	DATE	DESIGN
A1.	/.	重新核对图面	20.12.28	LiHui
A2.	/.	重新核对图面	22.11.15	LZR

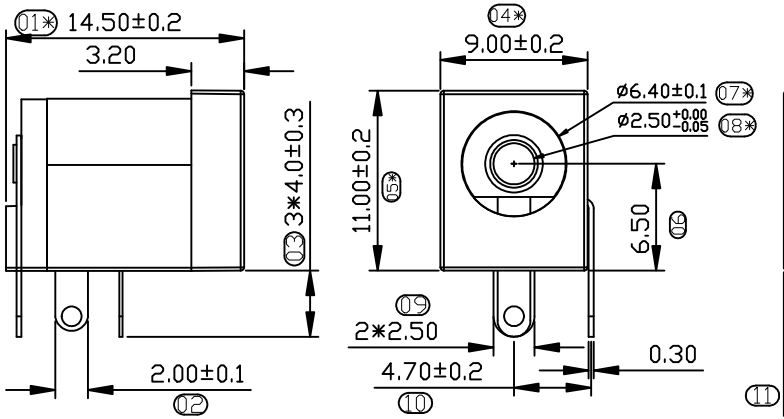

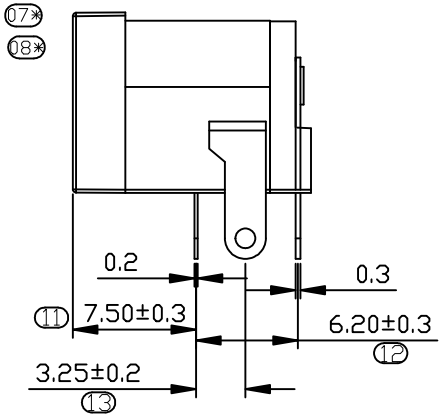

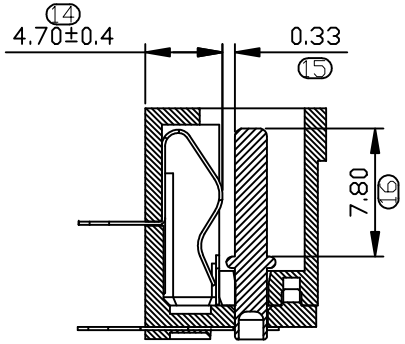

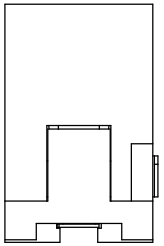

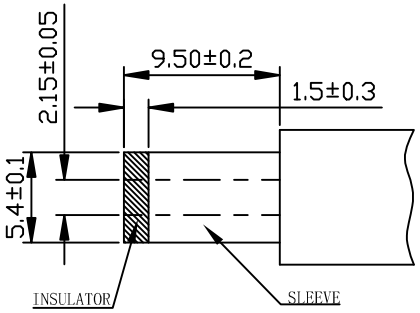

MATE PLUGE

NOTES:

1. MATERIAL:
   1.1.HOUSING: PBT ,COLOR IS BLACK,UL94 V-0;
   1.2.CONTACT: COLD ROLLED IRON(SPCC);
2. FINISH: PLATED OVER NI&SN;
3. RECINNEBDED PCB THICKNESS: 1.60mm MIN;
4. ELECTRICAL:
   4.1. VOLTAGE RATING: 30V DC ;
   4.2. CURRENT RATING: 1A ;
   4.3. CONTACT RESISTANCE: 35MILLIOHMS MAX.;
   4.4. WITHSTAND VOLTAGE: 500 VAC RMS 50(60)Hz,1MIN.;
   4.5. INSULATION RESISTANCE: 100MEGOHMS MIN @500V DC;
5. MECHANICAL:
   5.1. MATING FORCE: 25N MAX.;
   5.2. UNMATING FORCE: 3~25N ;
   5.3. OPERATING LIFE: 5000 CYCLES MIN.;
6.SALT SPRAY TEST: 12H;
7. SOLDERABILITY: 245±5°C,5±0.5S;
8. RESISTANCE TO SOLDER: 260±5°C,10±1S;
9 ENVIRONMENTAL:
   9.1. STORAGE TEMPERATURE RANGE: -40°C~+85°C;
   9.2. OPERATION TEMPERATURE RANGE: -25°C~+70°C;
10. THE MARK WITH "*" IS THE KEY INSPECTION DIMENSION FOR QC.

序号	品 名	材 质	电镀／颜色	备 注
E	芯针	SPCC	镀镍锡	
D	PIN脚	SPCC	镀镍锡	
C	弹片	SUS304	镀镍锡	
B	后塞	PBT	黑色	
A	基座	PBT	黑色	

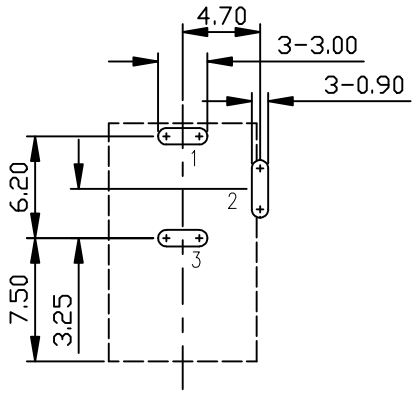

RECOMMENDED PCB LAYOUT
TOP VIEW(TOL:±0.05)

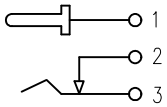

电路参考图

PART NO:
09.05.01.XXX
011:镀镍
012:镀锡

深圳市虹成电子有限公司

UNLESS OTHERWISE, GENERAL TOLERANCE:
X.xxx ±0.10
X.xx ±0.20
X.x ±0.30

ANGULAR:
X.xx° ±1°
X.x° ±3°
X.° ±5°

NAME: DC005 铁2.5芯 2.5窄脚)

P/N: HCDC-005-2.5-IQ

THIRD ANGLE PROJECTION

UNIT:	SCALE	SIZE:	SHEET:	REV.:
mm	1:1	A4	1/1	A1

DRAWN: CHECKED: APPROVED